HighQ-2™

Ultracompact, air-cooled, fixed wavelength femtosecond lasers

mks | Spectra-Physics®

The Spectra-Physics' HighQ-2 is an ultracompact, air-cooled, turn-key, fixed wavelength femtosecond laser. It features high peak power and ideal, highly focusable Gaussian spatial beam profile, making it the perfect laser source for fixed wavelength multiphoton imaging in vivo, micro- and nano-structuring, micro- and nano-surgery, and micro-dissection applications.

Designed as a reliable OEM laser for 24/7 operation, the HighQ-2 laser combines true turn-key operation and fast cold start turn-on, ensuring quick installation and easy operation.

HighQ-2 is equipped with long life diodes, a sealed optical cavity design and is manufactured in a controlled, cleanroom environment. The result is a highly dependable laser with long lifetime, high uptime and low cost of ownership.

The HighQ-2 Advantage

- Ultracompact, air-cooled laser head for easy integration
- High TEM_{00} beam quality with $M^2<1.15$
- High peak power for multiphoton imaging and micro-processing
- True turn-key operation
- Proven, dependable performance under 24/7 operation

Applications

- Multiphoton imaging (YFP, RFP, SHG, THG)
- Optogenetics
- Two-photon polymerization
- Micro- and nano-surgery, micro-dissection

Distributor

AZPECT part of amsTECHNOLOGIES
where technologies meet solutions

nordics@amstechnologies.com
azpect.amstechnologies.com

Contact us

HighQ-2 Specifications[1, 2]

	HighQ-2	HighQ-2-SHG
Output Characteristics	**IR**	**SHG**
Average Power	>1.5 W	>0.65 W
Wavelength	1045 ±8.0 nm	522 ±4.0 nm
Repetition Rate	63 MHz	
Pulse Width (FWHM)	<250 fs	
Pulse Energy	>24 nJ	>10 nJ
Peak Power	>80 kW	>35 kW
Power Stability	<1% rms (100 hours); <0.5 % rms (12 hours)	
Beam Quality	TEM_{00}, M^2 <1.15	
Beam Diameter, at waist (nominal)	0.8 mm	1.0 mm
Polarization	100:1, vertical	100:1, horizontal
Ellipticity	<10%	
Cold Start Time	≤20 min	
Warm Start Time	≤15 min	
Operating Temperature Range	18–32°C	
Cooling Requirements		
Laser Head	Air cooled	
Power Supply	Air cooled	
Utility Requirements		
Voltage	100–240 VAC, 50/60 Hz, 175 W	
Laser Head		
Dimensions (L × W × H)	8.74 x 8.03 x 3.97 in (222 x 204 x 100.9 mm)	
Weight	13.7 lbs (6.2 kg)	
Power Supply Physical		
Dimensions (L × W × H)	19" rack mountable, 2U. 18.03 x 19.02 x 3.46 in (458 x 483 x 88 mm)	
Weight	28.2 lbs (12.8 kg)	

1. Due to our continuous improvement program, specifications are subject to change without notice.
2. HighQ-2 is a Class IV - High Power Laser, whose beam is, by definition, a safety and fire hazard. Take precautions to prevent exposure to direct and reflected beams. Diffuse as well as specular reflections can cause severe skin or eye damage.

HighQ-2

Gaussian Beam Profile

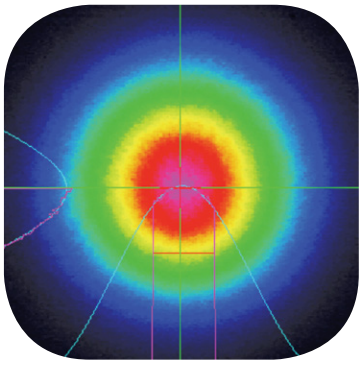

Typical Long Term Power Stability >100 hours[1]

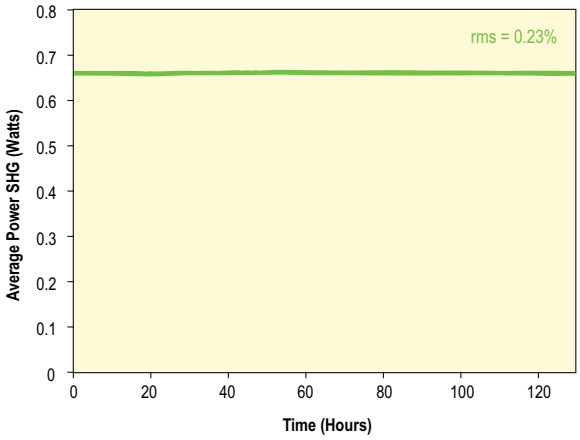

1. Typically measured performance; not a guaranteed or warranted specification.

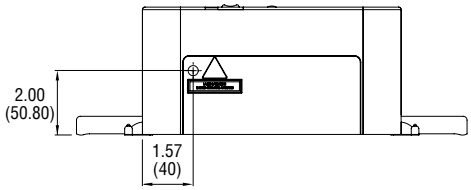

Front View

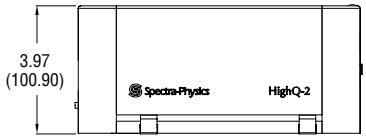

Side View

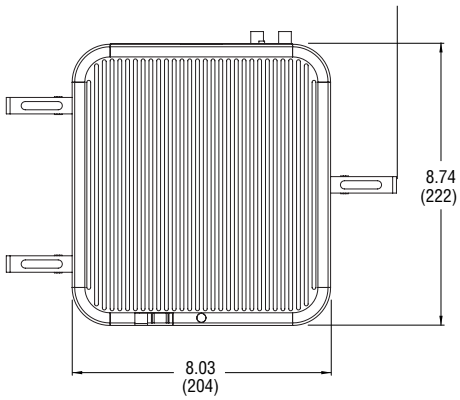

Top View

Dimensions in inch (mm)

HighQ-2 Dimensions

Distributor
AZPECT
part of
amsTECHNOLOGIES
where technologies meet solutions
nordics@amstechnologies.com
azpect.amstechnologies.com
Contact us