1.MATERIAL: D-ZLAF52LAM
2.ASSUME NO WINDOW FOR LASER DIODE
3.NOMINAL PARAMETERS:
WAVELENGTH:830 nm
NUMERICAL APERTURE:0.55
EFFECTIVE FOCAL LENGTH: 2.8mm
WORKING DISTANCE: 2.16mm

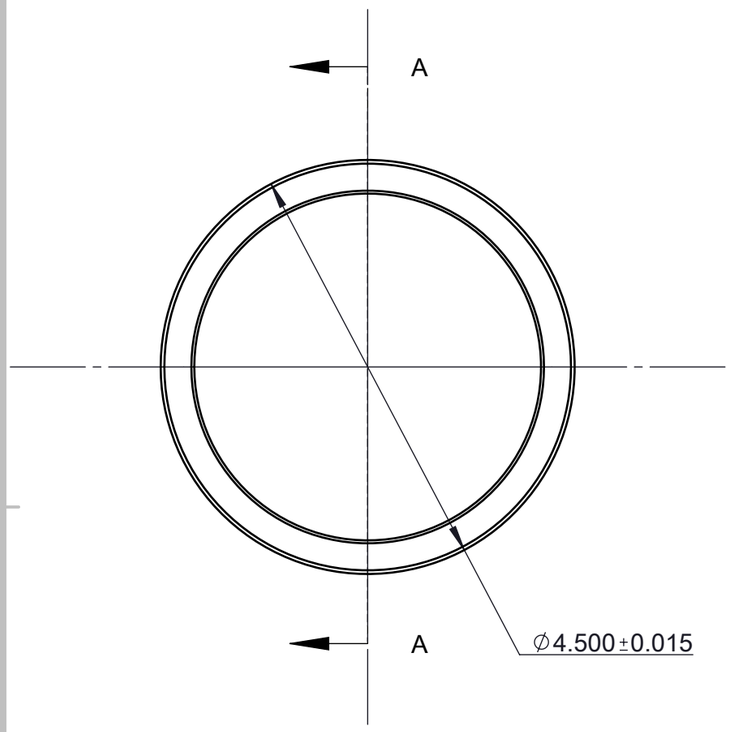

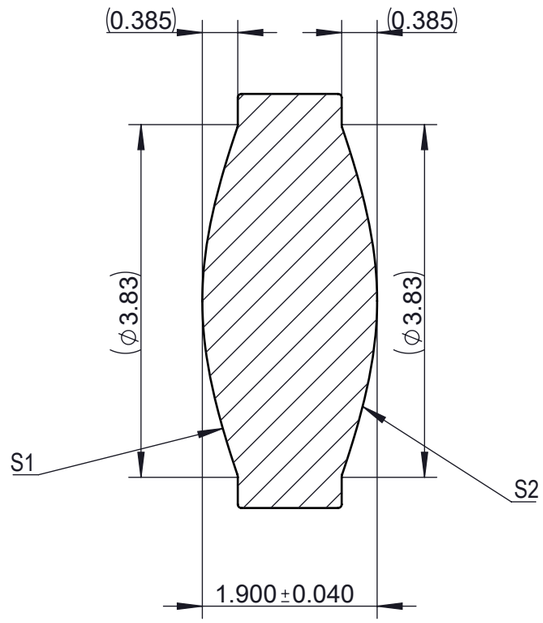

Notes：
1. Evenasphere Formula are defined by：

$$Z(r) = \frac{r^2 / R_c}{1 + \sqrt{1 - (1 + K)(r / R_c)^2}} + \sum_i A_{2i} r^{2i}$$

2. The coefficients are as below：

	S1	S2
Rc	3.879161	-3.879161
K	-0.431729	-0.431729
A2	0.000000E+00	0.000000E+00
A4	-8.168899E-03	8.168899E-03
A6	-1.995690E-04	1.995690E-04
A8	2.200933E-04	-2.200933E-04
A10	-3.982084E-05	3.982084E-05
A12	2.656612E-06	-2.656612E-06
A14	0.000000E+00	0.000000E+00
A16	0.000000E+00	0.000000E+00

3.REQUIREMENT

	S1	S2
Surface quality	S/D 40/20	
Clear Aperture	3.60mm	3.60mm
WFE	1.3λ<SA<5.4λ@633nm	
Roughness	Ra<5nm	

Distributor
amsTECHNOLOGIES
where technologies meet solutions
info@amstechnologies.com
www.amstechnologies-webshop.com
Contact us

Rev		Notes	Sign	Date
A	34	Initial	Clay	2022/4/20

MATERIAL
D-ZLAF52LAM

UNLESS OTHERWISE SPECIFIED
Unit is MM.
DEFAULT TOLERANCE:
.X ±0.25
.XX ±0.10
.XXX ±0.025
Angles: ±0.5°

光皓光学（江苏）有限公司
GH Optics(Jiangsu) Co.,Ltd.

图幅	单位	第一视角
A4	公制	
LE2861UC-10		A
		第 1 张 共 1 张