Gooch & Housego
ENABLING PHOTONIC TECHNOLOGIES

FIBER-Q®

1550 nm Fiber Coupled Acousto-Optic Modulator

T-M200-0.1C2J-3-F2S

Gooch & Housego specialize in providing optical components for fiber laser systems.

Gooch & Housego specialize in providing optical components for high power fiber laser and amplifier systems. In-house control of critical manufacturing processes; from crystalline material selection and orientation, cutting, polishing and anti-reflection coating through to fiber coupling, ensure our components are of the highest optical quality.

In addition to the standard product shown, custom configurations are available for specialized applications.

Key Features

- Low insertion loss
- Compact low profile package
- Rugged hermetic design
- Stable performance
- Custom configurations available

Applications

- Fiber laser
- Pulse picker
- Optical sensing

amsTECHNOLOGIES
where technologies meet solutions
info@amstechnologies.com
www.amstechnologies-webshop.com
Contact us

THE QUEEN'S AWARDS FOR ENTERPRISE: INNOVATION 2016

IOP INNOVATION AWARDS WINNER 2014
IOP Institute of Physics

Preliminary Specifications

Parameter	Min	Max	Typical	Comments
Interaction material	-	-	-	Tellurium Dioxide
Wavelength	1530 nm	1565 nm	1550 nm	Other wavelengths available on request
Average optical power handling	-	1 W	-	
Peak optical power handling	-	1 kW	-	Dependant on pulse width
Insertion loss	-	6.0 dB	5.0B	
Polarization dependant loss		0.5B	0.2B	
Extinction ratio	50B	-	-	
Return loss (RF ON/RF OFF)	40B	-	-	
Rise-time/fall-time (10% - 90%)	-	10 ns	-	Does not include RF Driver rise / fall time
Frequency	-	-	200 MHz	
VSWR	-	1.5:1	-	
Input impedance	-	-	50 Ω	
RF power	-	2.5 W	-	Absolute maximum rating (Higher power will cause damage)
Frequency shift	-	-	200 MHz	Up-shift
Fiber type	-	-	-	SMF-28
Fiber length	1.5 m	-	-	900 µm PVDF sleeving
Fiber termination	-	-	-	Bare fiber

As part of our policy of continuous product improvement, we reserve the right to change specifications at any time.

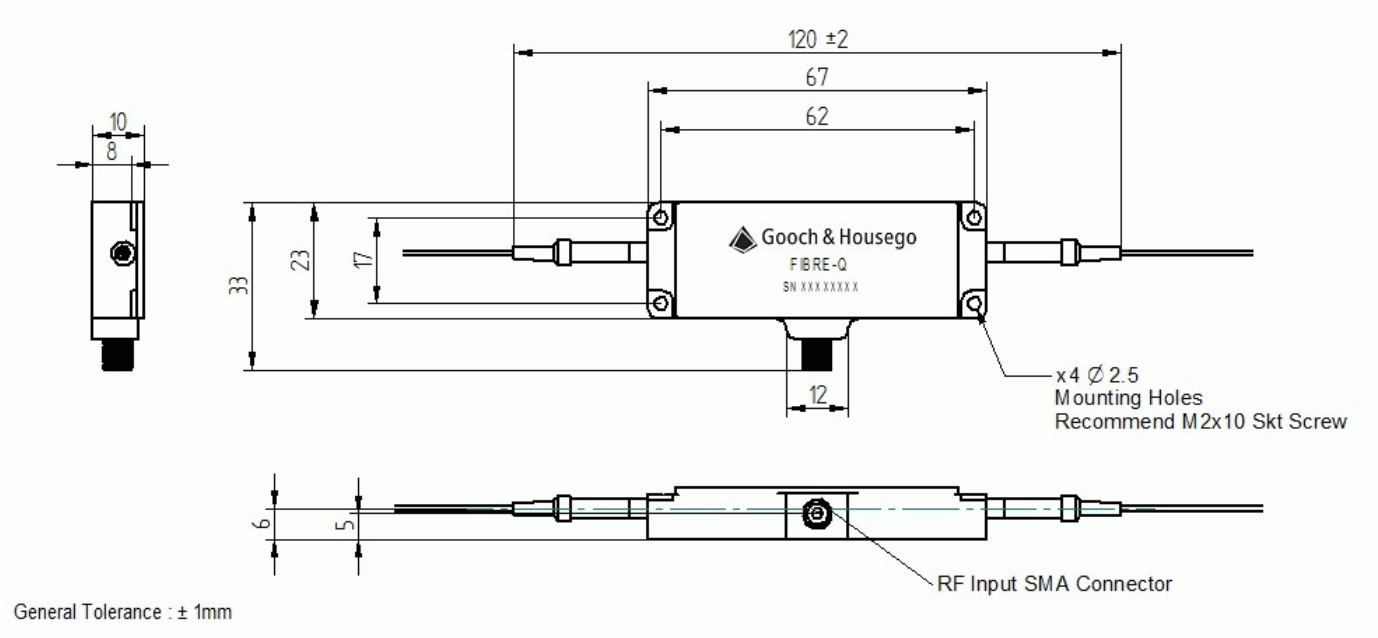

Other products which may be of interest

- HI REL couplers
- High power multimode combiners
- Combiners with all types of signal feedthrough fiber
- Ultra-low ratio tap couplers
- WDMs for combining signals with red pointer lasers
- OCT wideband couplers

amsTECHNOLOGIES
where technologies meet solutions
info@amstechnologies.com
www.amstechnologies-webshop.com
Contact us

For further information

E: torquaysales@goochandhousego.com

goochandhousego.com

As part of our policy of continuous product improvement, we reserve the right to change specifications at any time.