DATA SHEET

EYP-TPA-0850-02000-4006-BFU09-0000

Revision 0.70

TAPERED AMPLIFIERS
Semiconductor Optical Amplifier

General Product Information

Product	Application
850 nm Tapered Amplifier	Spectroscopy
14 Pin Butterfly Package (non hermetic)	
with PM Fiber and FC/APC Connector (Input)	
and collimated Output Beam	

Absolute Maximum Ratings

Parameter	Symbol	Unit	min	typ	max	Measurement Conditions / Comments
Storage Temperature	T_S	°C	-40		85	Stress in excess of one of the Absolute Maximum Ratings may damage the laser. Please note that a damaging optical power level may occur although the maximum current is not reached. These are stress ratings only, and functional operation at these or any other conditions beyond those indicated under Recommended Operational Conditions is not implied.
Operational Temperature at Case	T_C	°C	15		35	
Operational Temperature at Chip	T_{chip}	°C	15		35	
Forward Current	I_F	A			3.5	
Reverse Voltage	V_R	V			2	
Output Power	P_{opt}	W			2.2	

Recommended Operational Conditions

Parameter	Symbol	Unit	min	typ	max	Measurement Conditions / Comments
Operational Temperature at Case	T_C	°C	15		50	non condensing
Operational Temperature at Chip	T_{chip}	°C	15	25	35	
Forward Current	I_F	A			3.2	
Input Power	P_{input}	mW	10		80	
Output Power	P_{opt}	W			2	with proper injection from a seed laser

Characteristics at T_{chip}

Parameter	Symbol	Unit	min	typ	max	Measurement Conditions / Comments
Wavelength	λ_C	nm		850		
Gain Width (FWHM)	$\Delta\lambda$	nm		20		
Temp. Coefficient of Wavelength	$d\lambda / dT$	nm / K		0.3		
Operational Current	$I_{op\ Gain}$	A			3.2	P_{opt} = with proper injection from a seed laser
Output Power	P_{opt}	W	2.0			
Amplification	G	dB		16		at recommended maximum forward current

TAPERED AMPLIFIERS
Semiconductor Optical Amplifier

Characteristics at T_{chip} cont'd

Parameter	Symbol	Unit	min	typ	max	Measurement Conditions / Comments
Beam Diameter horizontal	$d_{out\,||}$	mm		1		1/e2
Beam Diameter vertical	$d_{out\perp}$	mm		1		1/e2
Output Divergence parallel	$\Theta_{out\,||}$	mrad		3		
Output Divergence perpendicular	$\Theta_{out\perp}$	mrad		3		
Polarization				TE		E field parallel to base plate

Thermoelectric Cooler

Parameter	Symbol	Unit	min	typ	max	Measurement Conditions / Comments
Current	I_{TEC}	A			2.5	P_{opt} = 2 W
Voltage	U_{TEC}	V			5	P_{opt} = 2 W
Power Dissipation (total loss at case)	P_{loss}	W		10		P_{opt} = 2 W
Temperature Difference	ΔT	K			20	P_{opt} = 2 W

Thermistor (Standard NTC Type)

Parameter	Symbol	Unit	min	typ	max	Measurement Conditions / Comments
Resistance	R	kΩ		10		T_{Chip} = 25° C
Beta Coefficient	β			3892		$R_1 / R_2 = e^{\beta (1/T_1 - 1/T_2)}$ at T_{LD} = 0° … 50° C
Steinhart & Hart Coefficient A	A			1.1293×10^{-3}		$1/T = A + B(\ln R) + C(\ln R)^3$
Steinhart & Hart Coefficient B	B			2.3410×10^{-4}		T: temperature in Kelvin
Steinhart & Hart Coefficient C	C			8.7755×10^{-8}		R: resistance at T in Ohm

EYP-TPA-0850-02000-4006-BFU09-0000

Revision 0.70

2022-01-10

TAPERED AMPLIFIERS
Semiconductor Optical Amplifier

Pin Assignment

1	Thermoelectric Cooler (+)	14	Thermoelectric Cooler (-)
2	Thermistor	13	Case
3	not connected	12	Amplifier (Cathode)
4	not connected	11	Amplifier (Cathode)
5	Thermistor	10	Amplifier (Anode)
6	not connected	9	Amplifier (Anode)
7	not connected	8	not connected

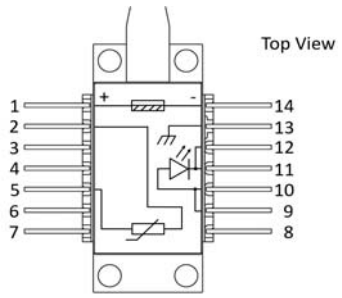

Package Drawings

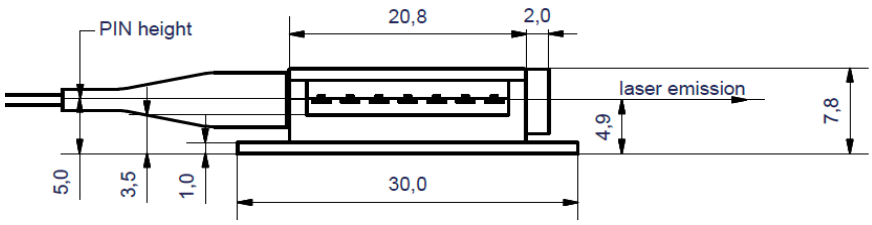

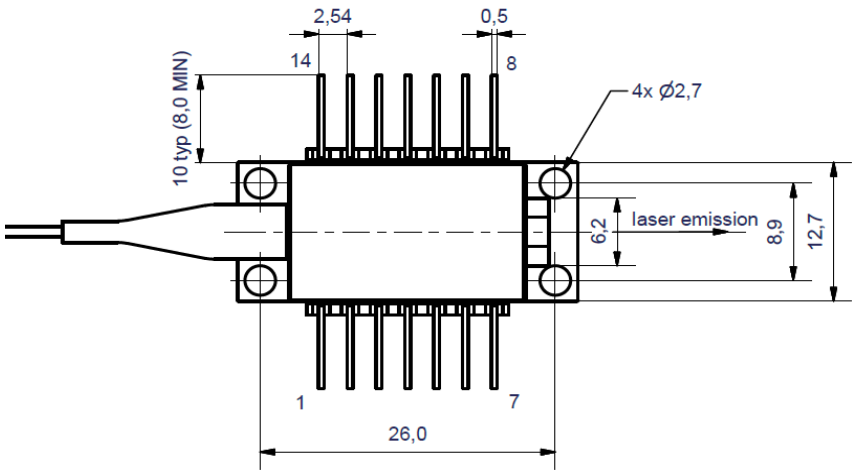

Caution. Excessive mechanical stress on the package can lead to a damage of the device.
See instruction manual
on www.toptica-eagleyard.com

EYP-TPA-0850-02000-4006-BFU09-0000

Revision 0.70

2022-01-10

TAPERED AMPLIFIERS
Semiconductor Optical Amplifier

Unpacking, Installation and Laser Safety

Unpacking the taperd amplifier should only be done at electrostatic safe workstations (EPA). Though protection against electro static discharge (ESD) is implemented in the laser package, charges may occur at surfaces. Please store this product in its original package at a dry, clean place until final use. During device installation, ESD protection has to be maintained.

The TPA diode type is known to be sensitive against thermal stress. It should not be operated without appropriate injection from a seed laser. Operating at moderate temperatures on proper heat sinks willl contribute to a long lifetime of the diode. The chip should be protected against moisture. A water vapor content below 5000 ppm is recommended for applications with high reliability requirements.

This amplifier is designed for the setup of MOPA systems. Appropriate seed lasers are DFB lasers of the type EYP-DFB-xxxx-xxxxx-1500-BFY12-000x with matching wavelengths. An external fiber isolator should be used between seed laser and amplifier in order to suppress backreflections that may disturb the emission spectrum of the seed laser and may cause mode-hops in case of wavelength tuning.

The laser emission from this diode is close to the invisible infrared region of the electromagnetic spectrum. Avoid direct and/or indirect exposure to the free running beam. Collimating the free running beam with optics as common in optical instruments will increase threat to the human eye.

Each tapered amplifier will come with an individual test protocol verifying the parameters given in this document.

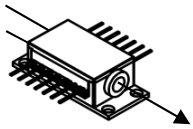

Laser Emission

IEC-60825-0

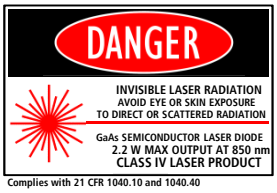

Complies with 21 CFR 1040.10 and 1040.40