EPIGAP Optronic GmbH
Koepenicker Str. 325b
D-12555 Berlin
Fon: +49 (0)30 657637 60
Fax: +49 (0)30 657637 70
sales@epigap-optronic.de

Data Sheet

Green SMD-LED EOLS-525-843

Rev. 02, 2017

Radiation	Type	Case
green	InGaN	SMD 3216 (1206), with lens

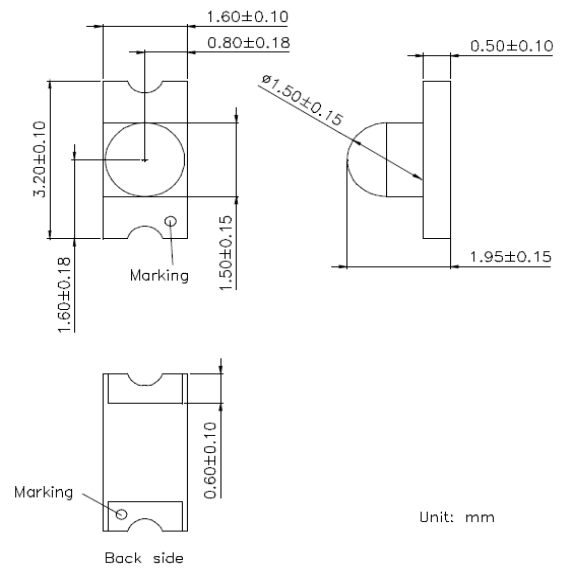

Description:

- Size 1206: 3.2 (L) x 1.6 (W) x 1.95 (H) mm
- Circuit substrate: glass laminated epoxy
- Devices are RoHS conform
- Lead free solderable, soldering pads: gold plated
- Marking at cathode

Maximum Ratings

Parameter	Test conditions	Symbol	Value	Unit
Forward current		I_F	20	mA
Peak forward current	$t_p \leq 100$ µs, τ=1:10	I_{FM}	100	mA
Reverse voltage		V_R	5	V
Reverse current		I_R	100	µA
Operating temperature range		T_{amb}	-40 to +85	°C
Storage temperature range		T_{stg}	-40 to +85	°C
Thermal resistance		R_{thJA}	450	K/W

Optical and Electrical Characteristics

Parameter	Symbol	Conditions	Min	typ	max	Unit
Forward voltage	V_F	I_F= 20 mA		3.25	3.8	V
Luminous intensity	I_v	I_F= 20 mA	1800	3550		mcd
Dominant wavelength	λ_d	I_F= 20 mA	520	525	530	nm

RoHS COMPLIANT Pb Pb-Free

We reserve the right to make changes to improve technical design and may do so without further notice. Parameters can vary in different applications.
All operating parameters must be validated for each customer application by the customer.

Distributor
amsTECHNOLOGIES
where technologies meet solutions
info@amstechnologies.com
www.amstechnologies-webshop.com
Contact us

EPIGAP Optronic GmbH
Koepenicker Str. 325b
D-12555 Berlin
Fon: +49 (0)30 657637 60
Fax: +49 (0)30 657637 70
sales@epigap-optronic.de

Data Sheet

Green SMD-LED **EOLS-525-843** Rev. 02, 2017

Maximal forward current (DC) characteristic

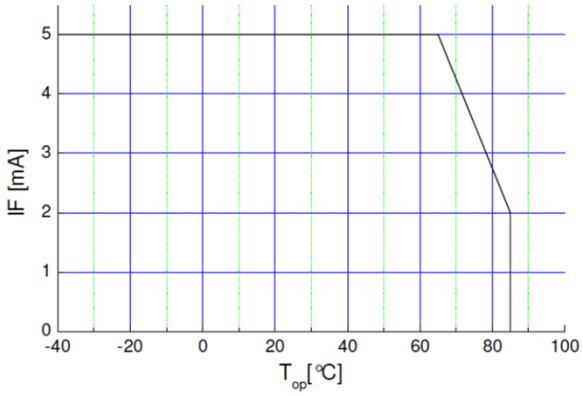

View angle

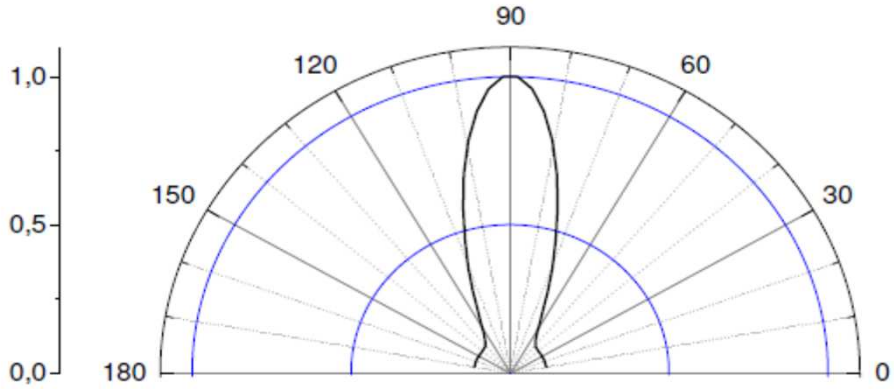

We reserve the right to make changes to improve technical design and may do so without further notice. Parameters can vary in different applications.
All operating parameters must be validated for each customer application by the customer.

EPIGAP Optronic GmbH
Koepenicker Str. 325b
D-12555 Berlin
Fon: +49 (0)30 657637 60
Fax: +49 (0)30 657637 70
sales@epigap-optronic.de

Data Sheet

Green SMD-LED EOLS-525-843

IR reflow soldering profile for lead free soldering

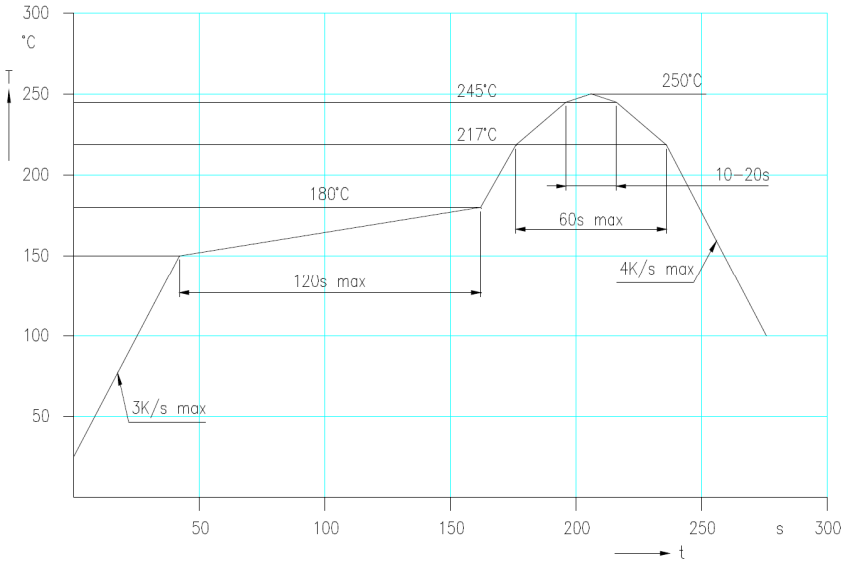

Recommended Soldering Patterns

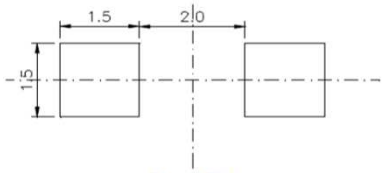

Pad TU

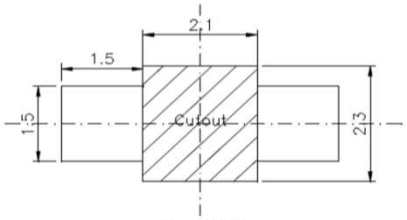

Pad TD

Manual soldering:
max power of iron 25 W / 3 s / 300°C

We reserve the right to make changes to improve technical design and may do so without further notice. Parameters can vary in different applications.
All operating parameters must be validated for each customer application by the customer.

Distributor
amsTECHNOLOGIES
where technologies meet solutions
info@amstechnologies.com
www.amstechnologies-webshop.com
Contact us